*Charge Transfer Interactions in Polymer–Polymer, Polymer–Small Molecule, and Copolymer Systems. I. Solution Studies**

INTRODUCTION

Charge transfer interactions in polymer systems continue to attract considerable attention for several reasons. The most important of them derives from the discovery that electrical conductivity and photoconductivity of organic polymer systems is due to charge transfer formation.[1] There are many studies investigating these electrical properties of polymeric charge transfer systems and some remarkable results have been obtained in systems containing the donor within the main chain (e.g., polyacetylene[2]). The donor, in conductive polymer cases, is usually an activated double bond, and iodine is the most commonly used acceptor.[3] Polymers having donor and/or acceptor groups introduced on the side-chain present the electrical properties of the charge transfer complex corresponding to the particular donor–acceptor interaction. Hence, a complex of poly(*N*-vinylcarbazole) with 2,4,7-trinitro-9-fluorenone is photoconductive in the visible region of light (see, for example, the monograph by Pearson and Stolka[4]). Since the discovery and commercial application of this photoconductive mixture,[5] the amount of research on this kind of polymer charge transfer complexes has increased considerably. A review of the literature up to 1979[6] covers research on different combinations: donor polymers with small molecular acceptors, acceptor polymers with small molecular donors, and intramolecular polymer complexes. The other possible combination, a blend of donor polymer with acceptor polymer, has also been investigated more recently from the conductivity point of view.[7]

The main question that arises when one looks at all these systems is: Which one is "better"? Comparisons between the equilibrium constants of complex formations suggest that there is an improvement when one goes from a small molecule–small molecule complex to a polymer–small molecule complex, irrespective of which one is the donor.[6] For an intramolecular complex there is no known method to determine this constant, but some UV spectral studies showed 1 order of magnitude difference in complex concentration in favor of the intramolecular complex.[8] Recent measurements of this equilibrium constant for a polymer–polymer complex in solid state showed values that could not be compared with anything else, but suggested that there is an increase in the value with increasing molecular weight up to an entanglement limit.[9]

There are also comparisons of some electric properties. Intramolecular complexes show higher photogeneration efficiency than polymer donor–small molecule acceptor complexes.[10]

In the course of our series of investigations on polymer charge transfer complexes it was revealed that some chemical shifts in both proton[11] and carbon[12] NMR solution spectra are very sensitive to complex formation. This is also true for solid-state high-resolution carbon NMR spectra.[13] The differences in chemical shifts between complexed and uncomplexed species can vary between ca. 0.1 ppm and over 10 ppm. They are assigned to a combination of two phenomena: One is the partial electron transfer between the donor and the acceptor,[14] thus modifying the electron density at both sites, and the other is aromatic shielding effects due to the spatial proximity of donor and acceptor groups that contain aromatic rings. In this paper we use such chemical shift differences in combination with measurements of electronic absorbances to compare the "strength" of charge transfer interaction for a few systems in solution. The systems are: polymer–polymer, polymer–small molecule, small molecule–small molecule, and intramolecular complexes in which the interacting groups are the same. The next paper will make the same comparison in solid state using CP-MAS spectroscopy. The donor group used in this study is a 3-substituted carbazole and the acceptor a 3,5-dinitrobenzoic acid ester, and this pair was chosen for its interesting photoconductive properties in the near-infrared region.[15] Structures of the involved substances are presented in Figure 1.

* This paper was presented in the Chemistry Department as a requirement for obtaining an Honors B. Sc. degree by L.B.

Journal of Applied Polymer Science, Vol. 40, 1063–1069 (1990)
© 1990 John Wiley & Sons, Inc.
CCC 0021-8995/90/5-61063-07$04.00

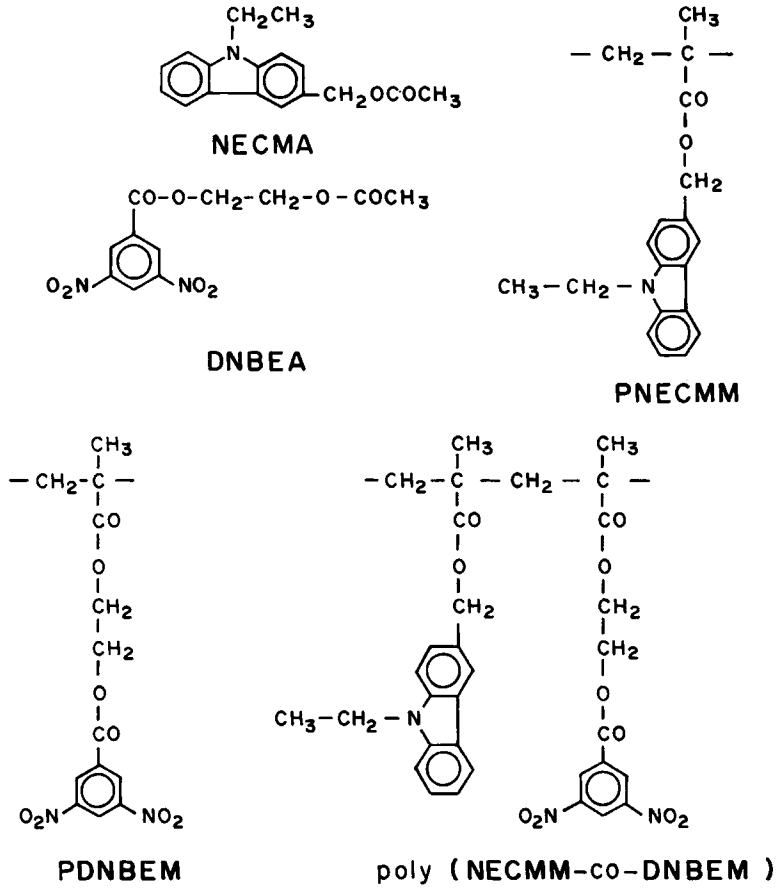

Fig. 1. Chemical structures of (*N*-ethylcarbazol-3-yl)methyl acetate (NECMA) = small molecule donor (SD); poly(*N*-ethylcarbazol-3-yl)methyl methacrylate (PNECMM) = polymer donor (PD); 2-((3,5-dinitrobenzoyl)oxy)ethyl acetate (DNBEA) = small molecule acceptor (SA); poly(2-((3,5-dinitrobenzoyl)oxy)ethyl methacrylate) (PDNBEM) = polymer acceptor (PA); and poly(NECMM-co-DNBEM) = intramolecular complex (IC).

EXPERIMENTAL

The small molecular donor and acceptor molecules, monomers, polymers, and copolymers were synthesized according to literature references. An outline of these methods and the necessary references are presented in Ref. 12. Charge transfer complexes in solution were prepared by mixing separate solutions of the components in a donor : acceptor ratio of 1 : 1 mol. The formation of charge transfer complexes was immediately visible by the appearance of intense orange color from the colorless solutions. A copolymer of NECMM with DNBEM having a 1 : 1 ratio of the structural units (as close to alternating sequences as possible) was prepared according to the method described elsewhere.[16] Carbon-13 NMR spectra were recorded at room temperature in a mixture of $CDCl_3$: $DMSOd_6$ solvents in a 1 : 1 volume ratio. The mixture was necessary because the donor homopolymer is not soluble in DMSO, while the acceptor one is not soluble in chloroform. All NMR spectra, mono- and 2-dimensional, were recorded on a Bruker AM-400 spectrometer. The concentration of all solutions was identical: 1.95×10^{-5} mol complex/0.5 g solvent. Electronic spectra were obtained in THF solutions on a Perkin-Elmer 552 spectrophotometer. The absorbance was measured for a concentration of 0.057 mol complex/L, or was extrapolated for this concentration using the Beer–Lambert law.

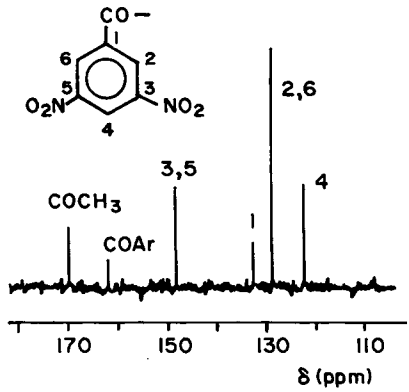

Fig. 2. Carbon-13 NMR spectrum of DNBEA in $CDCl_3$–$DMSOd_6$ (aromatic and carbonyl regions).

RESULTS AND DISCUSSION

Assignments of the NMR Spectra

Charge transfer interactions generate chemical shifts of higher magnitude in the carbon-13 than in the proton NMR spectra.[12] Moreover, both donor and acceptor signals seem to be sensitive to complexation, as opposed to the proton NMR spectra, where for similar systems only the acceptor

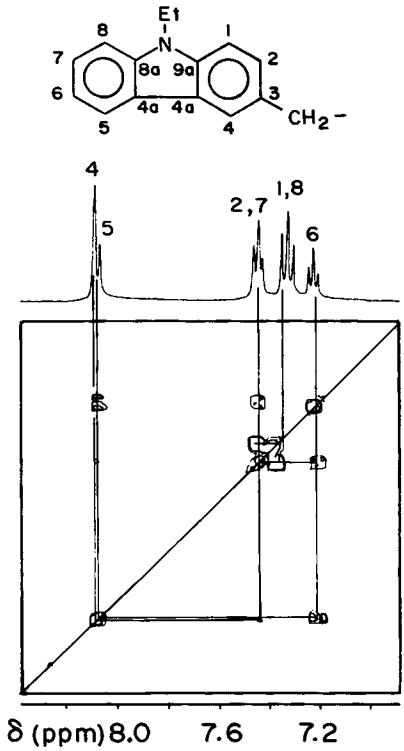

Fig. 3. COSY spectrum of NECMA (aromatic region) recorded in $CDCl_3$.

protons shifted to higher fields. In order to analyze chemical shift differences in complexed and uncomplexed systems, it is necessary to assign all NMR signals to the carbons that generate them. There are studies in the literature that assign the carbon signals in similar compounds, but one can find some contradictions in these assignments. Consequently, we decided to use two-dimensional spectroscopy in order to have an unambigous assignment. Figure 2 presents the carbon-13 spectrum of the small molecule acceptor (SA): 2-((3,5-dinitrobenzoyl)oxy)ethyl acetate (DNBEA). The assignments are straightforward and are presented in the figure. The spectra of the donor molecules are more complicated in the aromatic region, because they have eight nonequivalent carbon atoms.

An assignment of the signals can be made using a HETCOR two-dimensional pulse sequence.[17] This kind of pulse sequence generates a 2-dimensional chart pinpointing carbons and protons of a certain value of the coupling constant. It is generally used to identify directly bonded carbons and protons (average coupling constant of 140 Hz). However, for a HETCOR spectrum one needs a fully assigned proton spectrum, and in the aromatic region there are seven nonequivalent protons. This can be resolved by using another 2-dimensional pulse sequence called COSY.[17] It generates a symmetrical two-dimensional chart that has on the diagonal the projection of the proton spectrum. The nondiagonal peaks in this spectrum indicate coupling between different protons.

Figure 3 presents a COSY spectrum of the aromatic region of the small molecule donor (SD): (*N*-ethylcarbazol-3-yl)methyl acetate (NECMA). The assignments and correlations are given in the figure. It is clear that substitution of carbazole at carbon 3 generates downfield shifts of protons 4, 2, and 1, in decreasing order of the shift magnitude. Figure 4 presents the HETCOR spectrum for the aromatic region of SD and the assignments of the carbon spectrum. It is important to note that the carbon spectrum has been obtained with a pulse sequence that generates signals of protonated carbon to appear as positive, while nonprotonated carbons appear negative. As expected, the nonprotonated carbons do not present any correlations with the proton spectrum. The final carbon assignment differs from the one proposed in our earlier paper[12] (assignments of carbons 2 and 7 have been interchanged with 4 and 5).

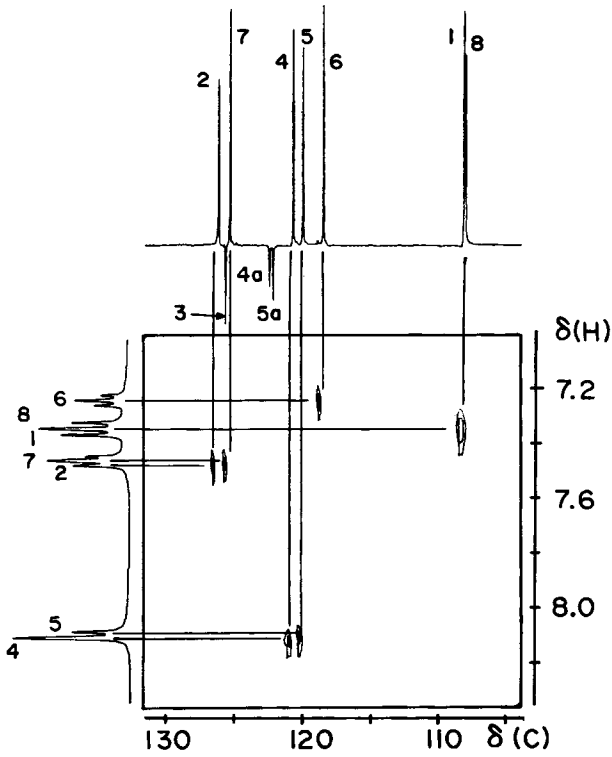

Fig. 4. HETCOR spectrum of NECMA (aromatic region) recorded in $CDCl_3$.

TABLE I
Chemical Shifts of NECMA

Carbon	Pure NECMA	Complexed NECMA		
		With PA	With SA	IC
Aromatic 1	108.5			+0.3
2	126.3			+0.1
3	126.0	+0.4	+0.4	+0.4
4	120.5	+0.1	+0.1	+0.3
4a	121.8			+0.3
5	119.9			+0.3
5a	122.0	+0.1	+0.1	+0.5
6	118.5			+0.1
7	125.5			+0.2
8	108.3			+0.1
8a	139.6			+1.0
9a	139.1			+1.0
CO	169.9	−0.1		—
NCH_2	36.9			+0.4
CH_2	66.3	+0.1		+0.4
CH_3	13.4			+0.3
CH_3 (CO)	20.6			—

Chemical Shifts in Complexes

With all assignments made, spectra of different complexes allow us to compare chemical shifts for complexed and uncomplexed states. These differences are presented here only for SD and SA, because there are some chemical shift differences in polymers due to polymer dispersity in configuration and conformation. We tried to avoid these so-called "polymer effects" on the chemical shifts. Table I lists the chemical shifts of pure and complexed SD and Table II presents the same parameters for SA. The plus sign in the columns of charge transfer complexes indicate an upfield shift from the uncomplexed material. When no data is given there is no difference in complexed–uncomplexed states for that particular carbon. A line is drawn when there is no corresponding carbon in the analysed substance. For example, the $CO—CH_3$ groups, present in SA and SD, do not exist in IC. The obvious conclusion from both tables is that complexation is much higher in the intramolecular complex. The chemical shifts of the copolymer are smaller than those obtained

TABLE II
Chemical Shifts of DNBEA

Carbon	Pure DNBEA	Complexed DNBEA		
		With PD	With SD	IC
Aromatic 1	132.6	+0.1	+0.1	+0.5
2 and 6	128.8	+0.1	+0.1	+0.6
3 and 5	148.1	+0.1	+0.1	+0.6
4	122.9	+0.1	+0.1	+0.6
Ar—CO	161.9			+0.2
CO (CH_3)	169.8		−0.1	—
CH_2	61.2	+0.1	+0.1	−0.8
CH_2	64.0			+0.7
CH_3 (CO)	20.3		−0.2	—

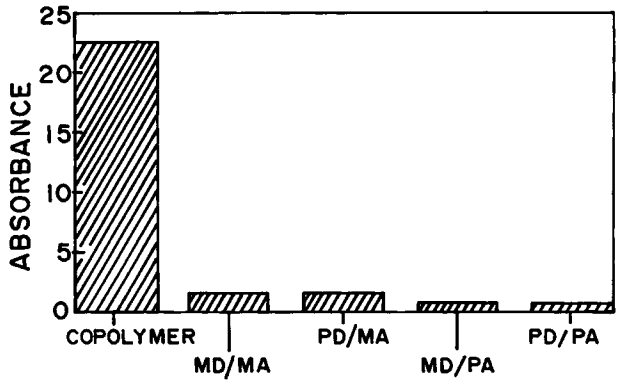

Fig. 5. Relative absorbances at 450 nm in the electronic spectra: (a) IC; (b) SD–SA; (c) PD–SA; (d) SD–PA; (e) PD–PA.

in a similar, previous analysis, and much smaller than those for SA–SD complex.[12] In that paper, the concentrations used to record the spectra were very high, generating a combination of intra- and intermolecular interactions in the case of IC. All the shifts of the SD–SA complex are intermolecular. In the case presented in this paper, the lower concentration used is limiting formation of intermolecular complexes; therefore, most of the complex concentration of IC is intramolecular.

Electronic Spectra

There is an intense absorption in the UV spectra of both components and complexes, due to the aromatic systems involved. For concentrations necessary to observe the visible region of the electronic spectra, this UV absorbance has an intense tail that can obscure the charge transfer maximum. For the system studied here the maximum should be in the 400–450 nm region.[12] For comparison purposes only, the absorbance can be measured at 450 nm, assuming that it is proportional to the charge transfer complex concentration. At the complex concentration used (0.057 mol/L), the copolymer presents a huge absorbance. Therefore, the copolymer solution had to be diluted in order to exhibit an absorbance lower than 2, and then the relative absorbance was calculated from the Lambert–Beer law for the standard concentration. Figure 5 presents this comparison of absorbances, and the value of 23 illustrated for IC is obviously calculated, not measured. Again one can see in Figure 5 that the copolymer is a much stronger complex than any of the physical mixtures. The absorbances seem to indicate that the next strong complex is that formed of small molecules, followed by a polymer–small molecule pair, and the weakest is the polymer–polymer complex.

CONCLUSIONS

NMR and electronic spectra in solution suggest that an intramolecular complex is much stronger than any of the intermolecular complexes studied. It is very difficult to compare the other complexes, because at the concentrations used there does not seem to be much difference in either the carbon chemical shifts or the electronic absorbance. Studies on more concentrated solutions are in progress and the preferred technique is another 2-dimensional NMR pulse sequence called NOESY, which indicates spatial proximity for protons that are not chemically bonded.[17] Also, a completely different approach is undertaken, using CP-MAS NMR spectroscopy to study interactions in solid state.

References

1. G. Wegner, *Angew. Chem. Int. Ed. Engl.*, **20**, 361 (1981).
2. H. Naarmann and N. Theophilou, *Synth. Met.*, **22**, 1 (1987).
3. M. Thakur, *Macromolecules*, **21**, 661 (1988).
4. J. M. Pearson and M. Stolka, *Poly(N-vinylcarbazole)* Gordon and Breach, New York, London, Paris, 1981, p. 85.

5. M. D. Shattuck and U. Vahtra, U.S. Pat. 3,484,237 (1969) (to IBM).
6. J. M. Pearson, S. R. Turner, and A. Ledwith, in *Molecular Associations,* R. Foster, Ed., Academic, New York, 1979, Vol. 2.
7. T. Uryu, H. Ohkawa, T. Furuichi, and R. Oshima, *Macromolecules,* **21,** 1890 (1988).
8. S. R. Turner and M. Stolka, *Macromolecules,* **11,** 835 (1978).
9. V. Percec, H. G. Schild, J. M. Rodriguez-Parada, and C. Pugh, *J. Polym. Sci. Polym. Chem. Ed.,* **26,** 935 (1988).
10. C. J. Hu, R. Oshima, and M. Seno, *J. Polym. Sci. Polym. Chem. Ed.,* **26,** 1239 (1988); *Macromolecules,* **21,** 1536 (1988).
11. A. Natansohn, *Polym. Bull.,* **9,** 67 (1983).
12. A. Natansohn, *J. Polym. Sci. Polym. Chem. Ed.,* **22,** 3161 (1984).
13. A. Natansohn, *Polym. Prepr. (Am. Chem. Soc.),* **29**(1), 21 (1988).
14. W. G. Blann, C. A. Fyfe, J. R. Lyerla, and C. S. Yannoni, *J. Am. Chem. Soc.,* **103,** 4030 (1981).
15. A. Natansohn, U.S. Pat. 4,562,133 (1985) (to the Weizmann Institute).
16. V. Frantisak and A. Natansohn, *J. Polym. Mater.,* **6,** 277 (1989).
17. R. Benn and H. Gunther, *Angew. Chem. Int. Ed. Engl.,* **22,** 350 (1983).

LYN BRIMACOMBE
ALMERIA NATANSOHN

Department of Chemistry
Queen's University
Kingston, Ontario, Canada
K7L 3N6

Received September 30, 1988
Accepted April 17, 1989